WSM

WORKSHOP MANUAL
DIESEL ENGINE

05-E3B SERIES,
05-E3BG SERIES

Kubota

KiSC issued 12, 2007 A

TO THE READER

This Workshop Manual has been prepared to provide servicing personnel with information on the mechanism, service and maintenance of 05-E3B. It is divided into three parts, “General”, “Mechanism” and “Servicing”.

■ **General**

Information on the engine identification, the general precautions, maintenance check list, check and maintenance and special tools are described.

■ **Mechanism**

Information on the construction and function are included. This part should be understood before proceeding with troubleshooting, disassembling and servicing.

Refer to Diesel Engine Mechanism Workshop Manual (Code No. 9Y021-01875) for the one which has not been described to this workshop manual.

■ **Servicing**

Information on the troubleshooting, servicing specification lists, tightening torque, checking and adjusting, disassembling and assembling, and servicing which cover procedures, precautions, factory specifications and allowable limits.

All information illustrations and specifications contained in this manual are based on the latest product information available at the time of publication.

The right is reserved to make changes in all information at any time without notice.

Due to covering many models of this manual, information or picture being used have not been specified as one model.

March 2007

SAFETY FIRST

This symbol, the industry's "Safety Alert Symbol", is used throughout this manual and on labels on the machine itself to warn of the possibility of personal injury. Read these instructions carefully.

It is essential that you read the instructions and safety regulations before you attempt to repair or use this unit.

DANGER : Indicates an imminently hazardous situation which, if not avoided, will result in death or serious injury.

WARNING : Indicates a potentially hazardous situation which, if not avoided, could result in death or serious injury.

CAUTION : Indicates a potentially hazardous situation which, if not avoided, may result in minor or moderate injury.

■ IMPORTANT : Indicates that equipment or property damage could result if instructions are not followed.

■ NOTE : Gives helpful information.

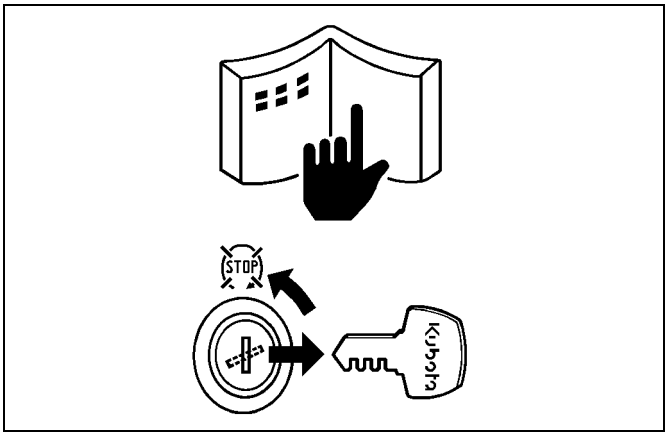

BEFORE SERVICING AND REPAIRING

- Read all instructions and safety instructions in this manual and on your engine safety decals.
- Clean the work area and engine.
- Park the machine on a firm and level ground.
- Allow the engine to cool before proceeding.
- Stop the engine, and remove the key.
- Disconnect the battery negative cable.
- Hang a "**DO NOT OPERATE**" tag in operator station.

SAFETY STARTING

- Do not start the engine by shorting across starter terminals or bypassing the safety start switch.
- Unauthorized modifications to the engine may impair the function and / or safety and affect engine life.

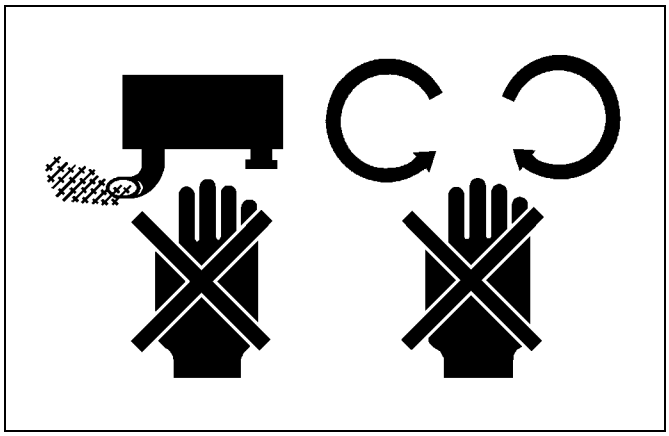

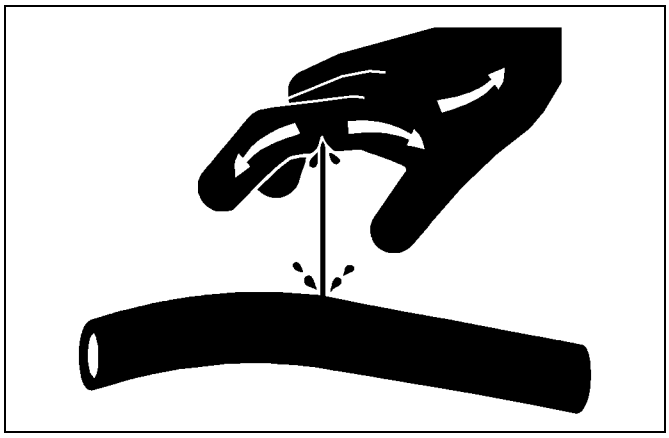

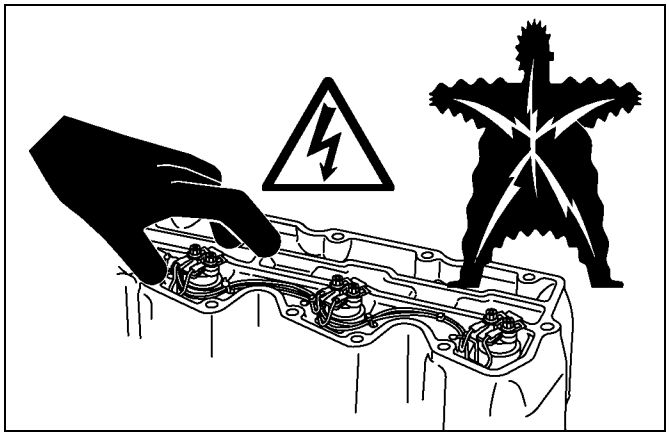

SAFETY WORKING

- Do not work on the machine while under the influence of alcohol, medication, or other substances or while fatigued.
- Wear close fitting clothing and safety equipment appropriate to the job.
- Use tools appropriate to the work. Makeshift tools, parts, and procedures are not recommended.
- When servicing is performed together by two or more persons, take care to perform all work safely.
- Do not touch the rotating or hot parts while the engine is running.
- Never remove the radiator cap while the engine is running, or immediately after stopping. Otherwise, hot water will spout out from radiator. Only remove radiator cap when cool enough to touch with bare hands. Slowly loosen the cap to first stop to relieve pressure before removing completely.
- Escaping fluid (fuel or hydraulic oil) under pressure can penetrate the skin causing serious injury. Relieve pressure before disconnecting hydraulic or fuel lines. Tighten all connections before applying pressure.
- Wear a suitable hearing protective device such as earmuffs or earplugs to protect against objectionable or uncomfortable loud noises.
- Do not open high-pressure fuel system.
  High-pressure fluid remaining in fuel lines can cause serious injury. Do not disconnect or attempt to repair fuel lines, sensors, or any other components between the high-pressure fuel pump and injectors on engines with high pressure common rail fuel system.
- High voltage exceeding 100 V is generated in the ECU, and is applied to the injector.
  Pay sufficient caution to electric shock when performing work activities.

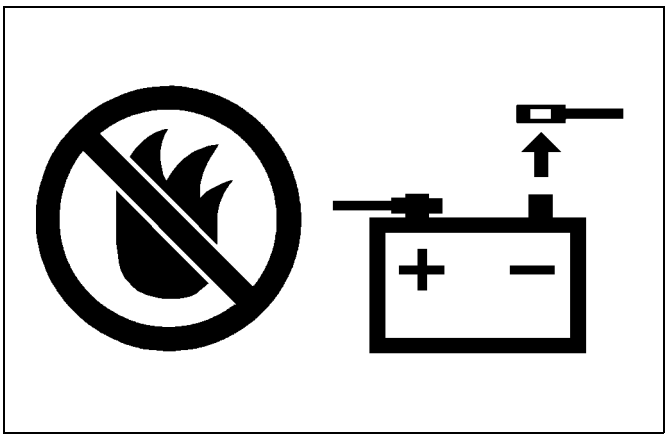

AVOID FIRES

- Fuel is extremely flammable and explosive under certain conditions. Do not smoke or allow flames or sparks in your working area.
- To avoid sparks from an accidental short circuit, always disconnect the battery negative cable first and connect it last.
- Battery gas can explode. Keep sparks and open flame away from the top of battery, especially when charging the battery.
- Make sure that no fuel has been spilled on the engine.

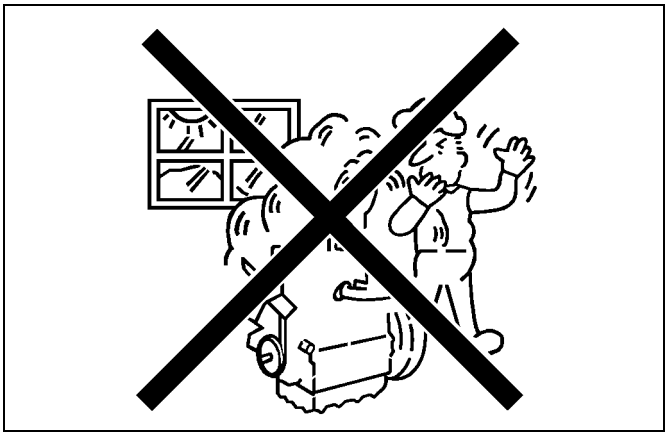

VENTILATE WORK AREA

- If the engine must be running to do some work, make sure the area is well ventilated. Never run the engine in a closed area. The exhaust gas contains poisonous carbon monoxide.

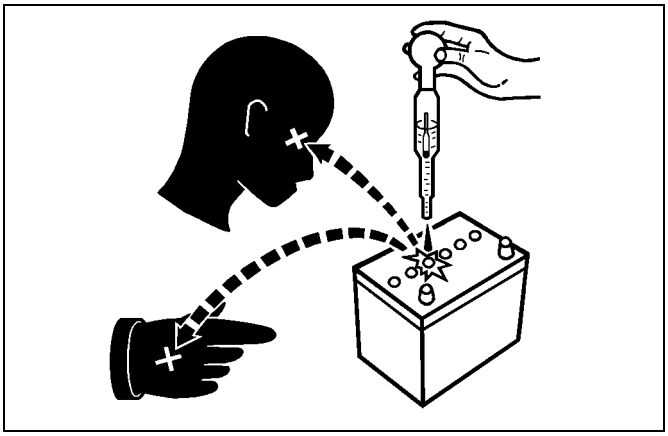

PREVENT ACID BURNS

- Sulfuric acid in battery electrolyte is poisonous. It is strong enough to burn skin, clothing and cause blindness if splashed into eyes. Keep electrolyte away from eyes, hands and clothing. If you spill electrolyte on yourself, flush with water, and get medical attention immediately.

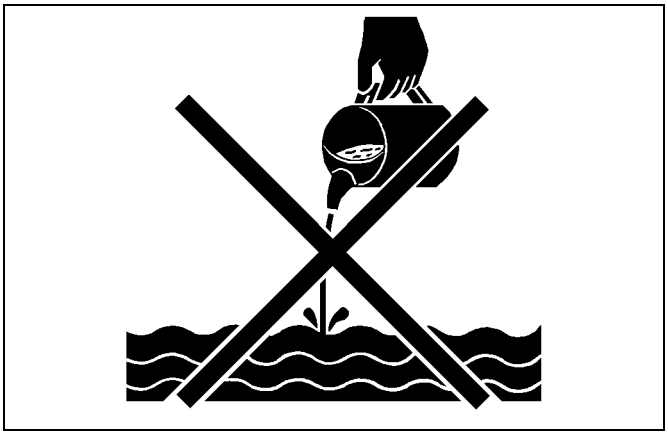

DISPOSE OF FLUIDS PROPERLY

- Do not pour fluids into the ground, down a drain, or into a stream, pond, or lake. Observe relevant environmental protection regulations when disposing of oil, fuel, coolant, electrolyte and other harmful waste.

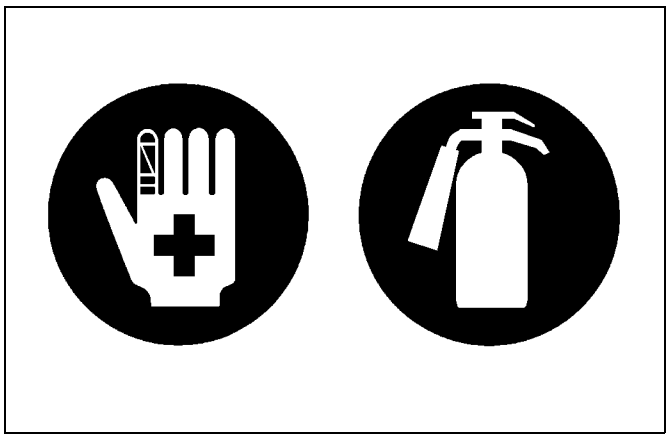

PREPARE FOR EMERGENCIES

- Keep a first aid kit and fire extinguisher handy at all times.
- Keep emergency numbers for doctors, ambulance service, hospital and fire department near your telephone.

SPECIFICATIONS

Model	D1005-E3B	D1105-E3B		D1105-T-E3B
Number of Cylinders	3			
Type	Vertical, Water-cooled, 4 cycle diesel engine			
Bore × Stroke mm (in.)	76.0 × 73.6 (2.99 × 2.90)	78.0 × 78.4 (3.07 × 3.09)		
Total Displacement cm^3 (cu.in.)	1001 (61.08)	1123 (68.53)		
ISO Net Continuous kW/min^{-1} (rpm) (HP/min^{-1} (rpm))	14.5 / 3000 (19.5 / 3000)	15.5 / 3000 (20.7/ 3000)	18.0 / 3600 (24.1 / 3600)	20.4 / 3000 (27.4 / 3000)
ISO/SAE Net Intermittent kW/min^{-1} (rpm) (HP/min^{-1} (rpm))	16.8 / 3000 (22.5 / 3000)	17.8 / 3000 (23.9 / 3000)	20.7 / 3600 (27.7 / 3600)	23.5 / 3000 (31.5 / 3000)
SAE Gross Intermittent kW/min^{-1} (rpm) (HP/min^{-1} (rpm))	17.5 / 3000 (23.5 / 3000)	18.5 / 3000 (24.8 / 3000)	21.7 / 3600 (29.1 / 3600)	24.5 / 3000 (32.8 / 3000)
Maximum Bare Speed (min^{-1} (rpm))	3200		3800	3200
Minimum Bare Idling Speed (min^{-1} (rpm))	900			
Combustion Chamber	Spherical type (E-TVCS)			
Fuel Injection Pump	Bosch MD type mini pump			
Governor	All speed mechanical governor			
Direction of Rotation	Counter-clockwise (viewed from flywheel side)			
Injection Nozzle	Mini Nozzle (DNOPD)			
Injection Timing	0.3142 rad (18.00 °) before T.D.C.	0.3142 rad (18.00 °) before T.D.C.	0.3491 rad (20.00 °) before T.D.C.	0.2967 rad (17.00 °) before T.D.C.
Firing Order	1-2-3			
Injection Pressure	13.73 MPa (140.0 kgf/cm^2, 1991 psi)			
Compression Ratio	24 : 1		23 : 1	
Lubricating System	Forced lubrication by trochoid pump			
Oil Pressure Indicating	Electrical type switch			
Lubricating Filter	Full flow paper filter (Cartridge type)			
Cooling System	Pressurized radiator, forced circulation with water pump			
Starting System	Electric Starting with Starter			
Starting Motor	12 V, 1.2 kW			
Starting Support Device	By glow plug in combustion chamber			
EGR	None			
Battery	12 V, 65 AH, equivalent			
Charging Alternator	12 V, 480 W			
Fuel	Diesel Fuel No.2-D (ASTM D975)			
Lubricating Oil	Class CF lubricating oil as per API classification is recommended. For details on recommended lubricating oils, see page G-6, 9.			
Lubricating Oil Capacity	5.1 L (1.3 U.S.gals)			
Weight (Dry) kg (lbs)	93.0 (205.0)			97.0 (214)

* The specification described above is of the standard engine of each model.
* Conversion Formula : HP = 0.746 kW, PS = 0.7355 kW

W10441170

Model	D1305-E3B	V1505-E3B		V1505-T-E3B
Number of Cylinders	3	4		
Type	Vertical, Water-cooled, 4 cycle diesel engine			
Bore × Stroke mm (in.)	78.0 × 88.0 (3.07 × 3.46)	78.0 × 78.4 (3.07 × 3.09)		
Total Displacement cm^3 (cu.in.)	1261 (76.95)	1498 (91.41)		
ISO Net Continuous kW/min^{-1} (rpm) (HP/min^{-1} (rpm))	18.2 / 3000 (24.4 / 3000)	21.7 / 3000 (29.1 / 3000)	23.9 / 3600 (32.0 / 3600)	27.2 / 3000 (36.4 / 3000)
ISO/SAE Net Intermittent kW/min^{-1} (rpm) (HP/min^{-1} (rpm))	21.0 / 3000 (28.2 / 3000)	25.0 / 3000 (33.5 / 3000)	27.5 / 3600 (36.9 / 3600)	31.3 / 3000 (42.0 / 3000)
SAE Gross Intermittent kW/min^{-1} (rpm) (HP/min^{-1} (rpm))	21.7 / 3000 (29.1 / 3000)	26.5 / 3000 (35.5 / 3000)	29.0 / 3600 (38.9 / 3600)	33.0 / 3000 (44.2 / 3000)
Maximum Bare Speed (min^{-1} (rpm))	3200	3200	3800	3200
Minimum Bare Idling Speed (min^{-1} (rpm))	1300	900		
Combustion Chamber	Spherical type (E-TVCS)			
Fuel Injection Pump	Bosch MD type mini pump			
Governor	All speed mechanical governor			
Direction of Rotation	Counter-clockwise (viewed from flywheel side)			
Injection Nozzle	Mini Nozzle (DNOPD)			
Injection Timing	0.3142 rad (18.00 °) before T.D.C.	0.2967 rad (17.00 °) before T.D.C.	0.3491 rad (20.00 °) before T.D.C.	0.2967 rad (17.00 °) before T.D.C.
Firing Order	1-2-3	1-3-4-2		
Injection Pressure	13.73 MPa (140.0 kgf/cm^2, 1991 psi)			
Compression Ratio	24 : 1		23 : 1	
Lubricating System	Forced lubrication by trochoid pump			
Oil Pressure Indicating	Electrical type switch			
Lubricating Filter	Full flow paper filter (Cartridge type)			
Cooling System	Pressurized radiator, forced circulation with water pump			
Starting System	Electric Starting with Starter			
Starting Motor	12 V, 1.1 kW	12 V, 1.2 kW		
Starting Support Device	By glow plug in combustion chamber			
EGR	None			
Battery	12 V, 65 AH, equivalent	12 V, 75 AH, equivalent		
Charging Alternator	12 V, 480 W			
Fuel	Diesel Fuel No.2-D (ASTM D975)			
Lubricating Oil	Class CF lubricating oil as per API classification is recommended. For details on recommended lubricating oils, see page G-6, 9.			
Lubricating Oil Capacity	5.7 L (1.5 U.S.gals)	6.7 L (1.8 U.S.gals)		
Weight (Dry) kg (lbs)	95.0 (209)	110.0 (242.5)		114.0 (251.3)

* The specification described above is of the standard engine of each model.
* Conversion Formula : HP = 0.746 kW, PS = 0.7355 kW

W10316890

Model	D1005-E3BG	D1105-E3BG	D1305-E3BG	V1505-E3BG
	BG1	BG1	BG1	BG1
Number of Cylinders	3			4
Type	Vertical, Water-cooled, 4 cycle diesel engine			
Bore × Stroke mm (in.)	76.0 × 73.6 (2.99 × 2.90)	78.0 × 78.4 (3.07 × 3.09)	78.0 × 88.0 (3.07 × 3.46)	78.0 × 78.4 (3.07 × 3.09)
Total Displacement cm^3 (cu.in.)	1001 (61.08)	1123 (68.53)	1261 (76.95)	1498 (91.41)
STANDBY ISO 3046 kW/min^{-1} (rpm) SAE J-1349 HP/min^{-1} (rpm)	9.8 / 1800 13.7 / 1800	11.5 / 1800 15.4 / 1800	13.1 / 1800 17.6 / 1800	15.1 / 1800 20.2 / 1800
NET Continuous ISO 3046 kW/min^{-1} (rpm) SAE J-1349 HP/min^{-1} (rpm)	8.6 / 1800 11.6 / 1800	10.1 / 1800 13.6 / 1800	11.9 / 1800 16.0 / 1800	13.4 / 1800 17.9 / 1800
Governor Regulation	Less than 5 %			
Combustion Chamber	Spherical type (E-TVCS)			
Fuel Injection Pump	Bosch MD type mini pump			
Governor	All speed mechanical governor			
Direction of Rotation	Counter-clockwise (viewed from flywheel side)			
Injection Nozzle	Mini Nozzle (DNOPD)			
Injection Timing	0.2705 rad (15.50 °) before T.D.C.		0.2618 rad (15.00 °) before T.D.C.	
Firing Order	1-2-3			1-3-4-2
Injection Pressure	13.73 MPa (140.0 kgf/cm^2, 1991 psi)			
Compression Ratio	24 : 1			
Lubricating System	Forced lubrication by trochoid pump			
Oil Pressure Indication	Electrical type switch			
Lubricating Filter	Full flow paper filter (Cartridge type)			
Cooling System	Pressurized radiator, forced circulation with water pump			
Starting System	Electric Starting with Starter			
Starting Motor	12 V, 1.0 kW			12 V, 1.2 kW
Starting Support Device	By glow plug in combustion chamber			
EGR	None			
Battery	12 V, 65 AH, equivalent		12 V, 75 AH, equivalent	
Charging Alternator	12 V, 360 W			
Fuel	Diesel Fuel No. 2-D (ASTM D975)			
Lubricating Oil	Class CF lubricating oil as per API classification is recommended. For details on recommended lubricating oils, see page G-6, 9.			
Lubricating Oil Capacity	5.1 L (1.3 U.S.gals)		5.7 L (1.5 U.S.gals)	6.7 L (1.8 U.S.gals)
Weight (Dry) kg (lbs)	110 (242)		112 (247)	127 (280)

* The specification described above is of the standard engine of each model.
* Conversion Formula : HP = 0.746 kW, PS = 0.7355 kW

W10455750

DIMENSIONS

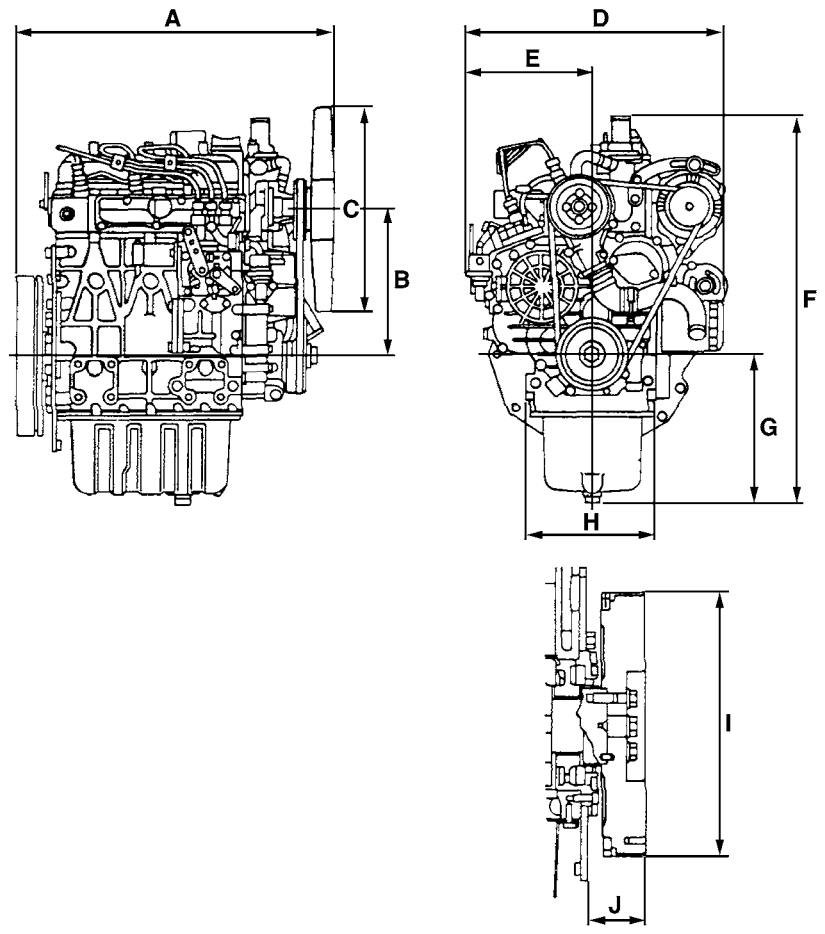

3EEAEACFP001A

Unit : mm (in.)

	D1005-E3B	D1105-E3B	D1105-T-E3B
A	497.8 (19.60)	497.8 (19.60)	497.8 (19.60)
B	230 (9.06)	230 (9.06)	230 (9.06)
C	330 dia. (13.0 dia.)	330 dia. (13.0 dia.)	330 dia. (13.0 dia.)
D	396 (15.6)	396 (15.6)	396 (15.6)
E	194 (7.64)	194 (7.64)	194 (7.64)
F	608.7 (23.96)	608.7 (23.96)	608.7 (23.96)
G	233.5 (9.193)	233.5 (9.193)	233.5 (9.193)
H	200 (7.87)	200 (7.87)	200 (7.87)
I	250.81 to 251.12 dia. (9.8744 to 9.8866 dia.)	250.81 to 251.12 dia. (9.8744 to 9.8866 dia.)	250.81 to 251.12 dia. (9.8744 to 9.8866 dia.)
J	56 (2.2)	56 (2.2)	56 (2.2)

W1038971

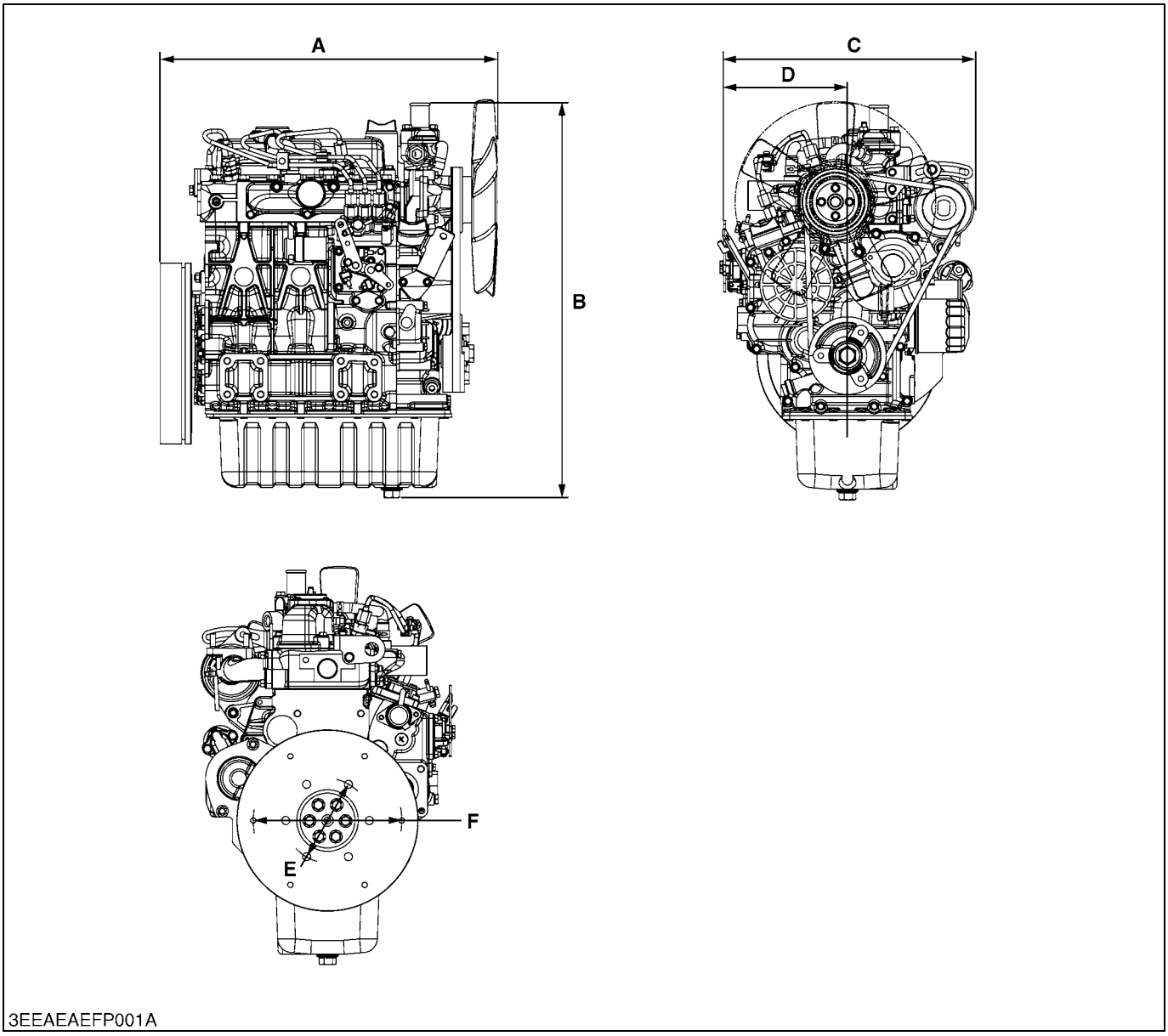

Unit : mm (in.)

	D1305-E3B
A	503.5 (19.82)
B	590.1 (23.23)
C	374.4 (14.74)
D	185.3 (7.295)
E	125 dia. (4.92 dia.)
F	222.2 dia. (8.748 dia.)

W1040012

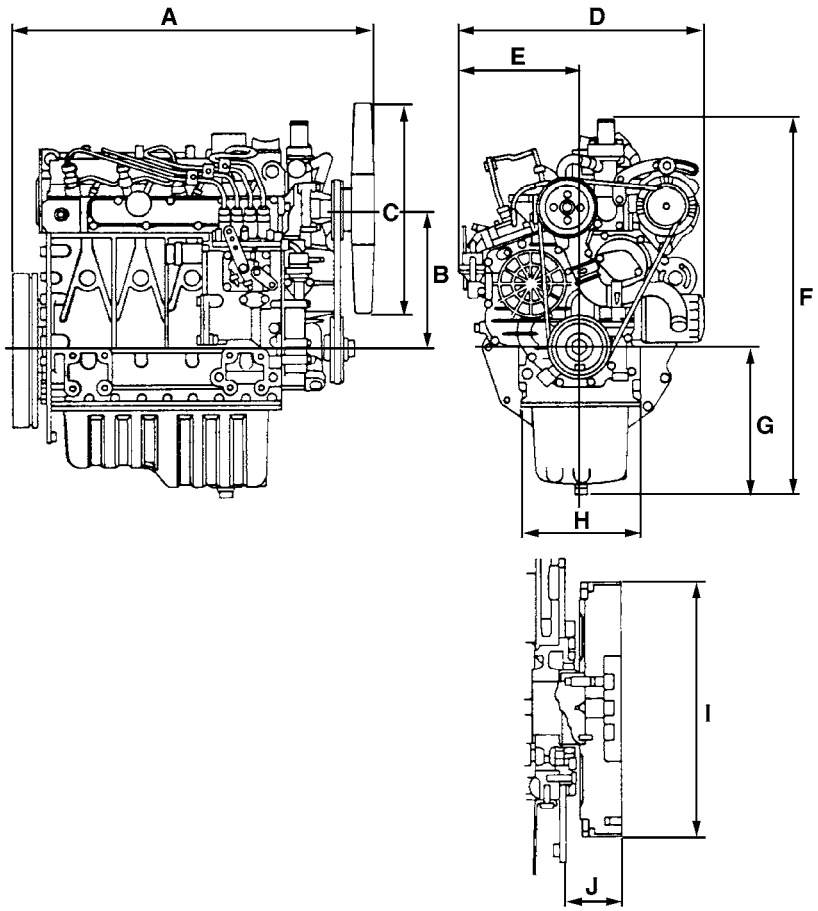

3EEAEACFP002A

Unit : mm (in.)

	V1505-E3B	V1505-T-E3B
A	591.3 (23.28)	591.3 (23.28)
B	230 (9.06)	230 (9.06)
C	370 dia. (14.6 dia.)	370 dia. (14.6 dia.)
D	396 (15.6)	396 (15.6)
E	194 (7.64)	194 (7.64)
F	613.7 (24.16)	629.3 (24.78)
G	238.5 (9.390)	238.5 (9.390)
H	200 (7.87)	200 (7.87)
I	250.81 to 251.12 dia. (9.8744 to 9.8866 dia.)	250.81 to 251.12 dia. (9.8744 to 9.8866 dia.)
J	56 (2.2)	56 (2.2)

W1039589

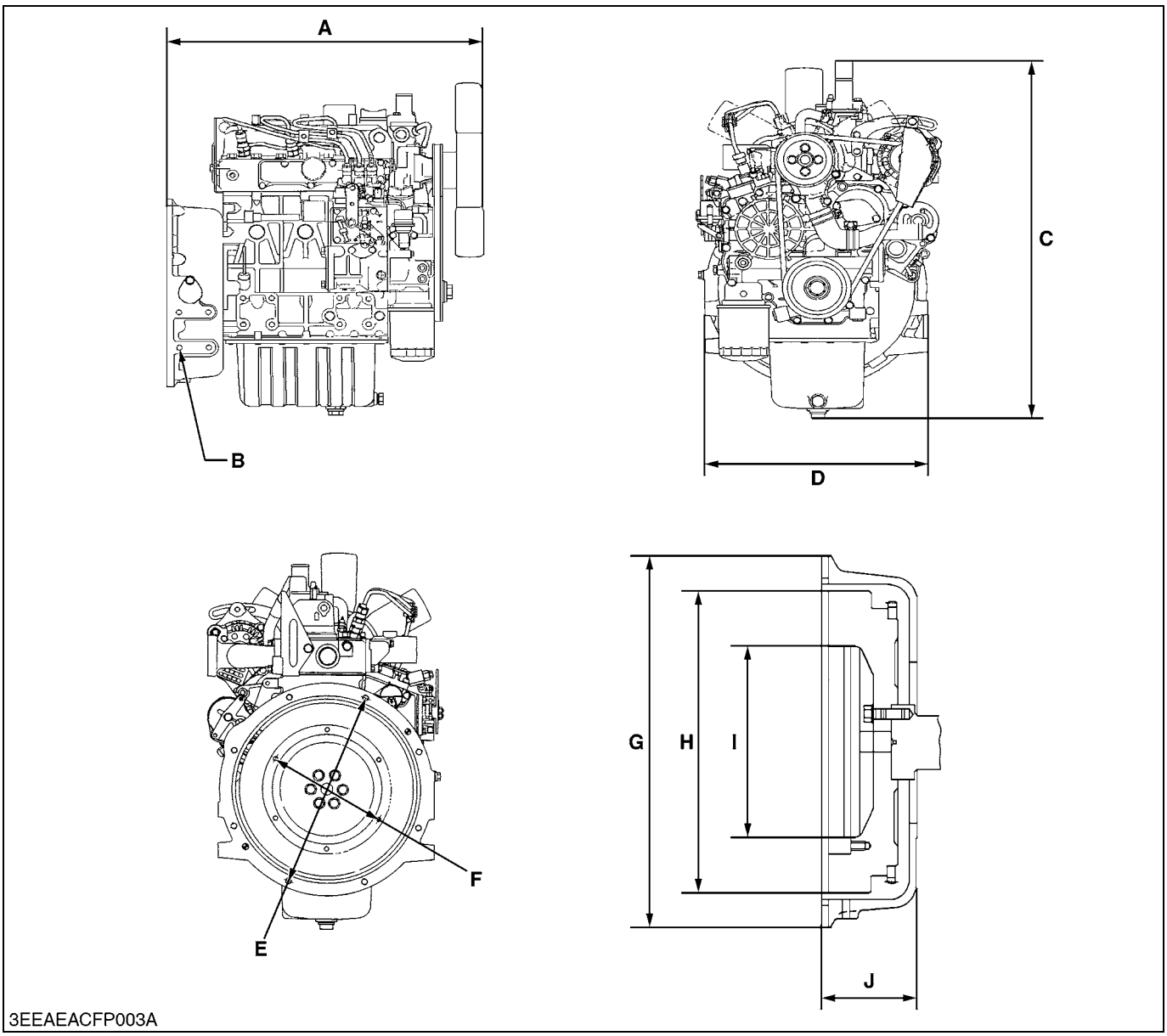

Unit : mm (in.)

	D1005-E3BG	D1105-E3BG	V1505-E3BG
A	546.6 (21.52)	546.6 (21.52)	634.3 (24.97)
B	4-3/8-16 UNC-2B Depth 16 (0.63)	4-3/8-16 UNC-2B Depth 16 (0.63)	4-3/8-16 UNC-2B Depth 16 (0.63)
C	608.7 (23.96)	608.7 (23.96)	613.7 (24.16)
D	360 (14.2)	360 (14.2)	360 (14.2)
E	333.38 dia. (13.125 dia.)	333.38 dia. (13.125 dia.)	333.38 dia. (13.125 dia.)
F	200.02 dia. (7.8748 dia.)	200.02 dia. (7.8748 dia.)	200.02 dia. (7.8748 dia.)
G	356 dia. (14.0 dia.)	356 dia. (14.0 dia.)	356 dia. (14.0 dia.)
H	290 dia. (11.4 dia.)	290 dia. (11.4 dia.)	290 dia. (11.4 dia.)
I	184.2 dia. (7.252 dia.)	184.2 dia. (7.252 dia.)	184.2 dia. (7.252 dia.)
J	98 (3.9)	98 (3.9)	98 (3.9)

W1047605

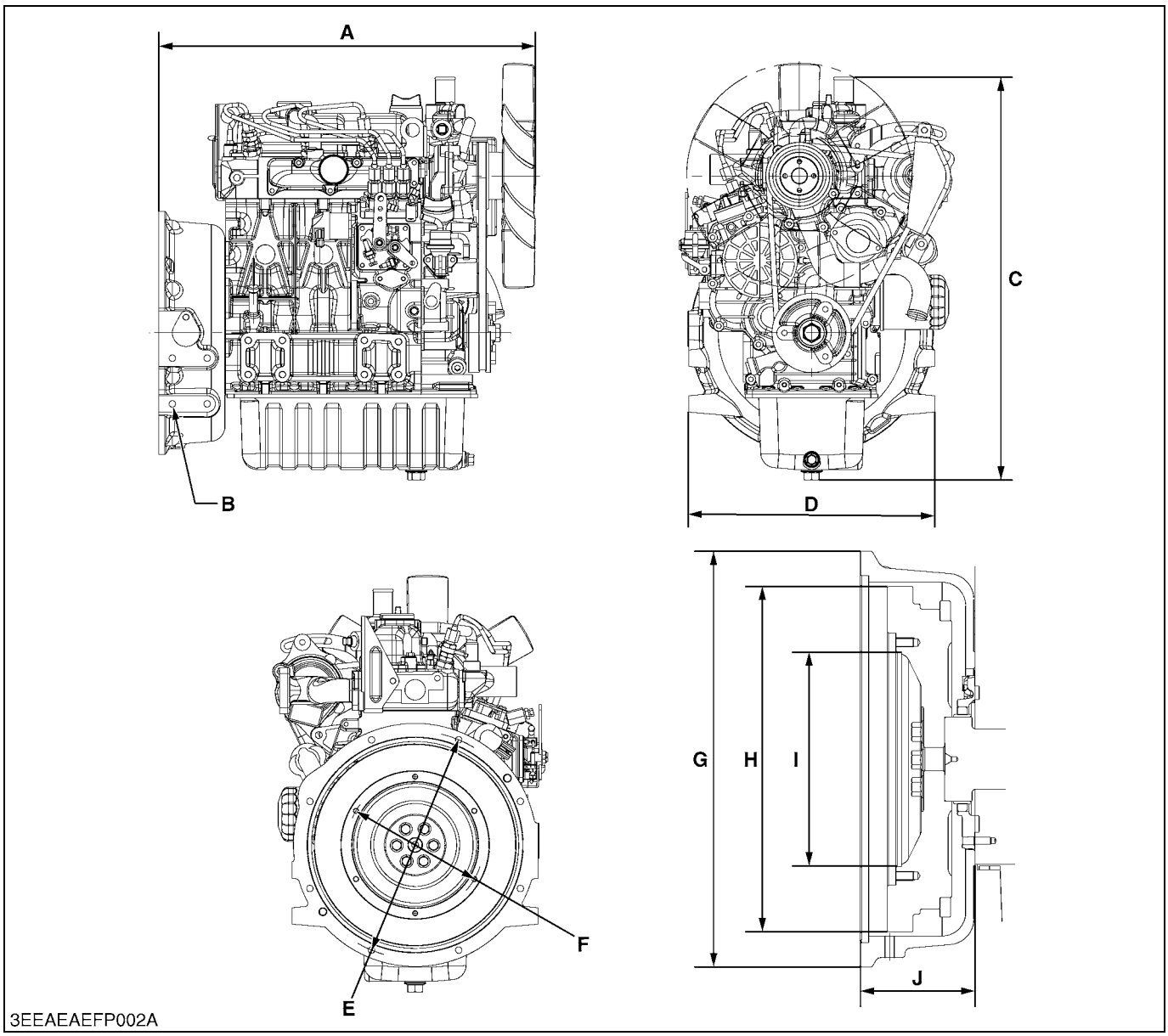

Unit : mm (in.)

	D1305-E3BG
A	551.3 (21.70)
B	4-3/8-16 UNC-2B Depth 16 (0.63)
C	590.1 (23.23)
D	360 (14.2)
E	333.38 dia. (13.125 dia.)
F	200.02 dia. (7.8748 dia.)
G	356 dia. (14.0 dia.)
H	296 dia. (11.7 dia.)
I	184.2 dia. (7.252 dia.)
J	98 (3.9)

W1047193

GENERAL

CONTENTS

1. ENGINE IDENTIFICATION

[1] MODEL NAME AND ENGINE SERIAL NUMBER

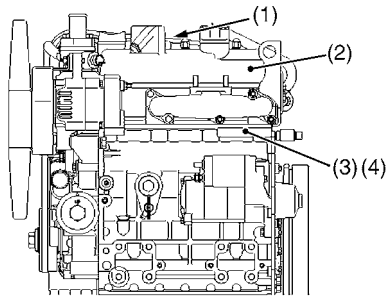

3EEAEAC0P001B

When contacting the manufacture, always specify your engine model name and serial number.

The engine model and its serial number need to be identified before the engine can be serviced or parts replaced.

■ **Engine Serial Number**

The engine serial number is an identified number for the engine. It is marked after the engine model number.

It indicates month and year of manufacture as follows.

- **Year of manufacture**

Alphabet or Number	Year	Alphabet or Number	Year
1	2001	F	2015
2	2002	G	2016
3	2003	H	2017
4	2004	J	2018
5	2005	K	2019
6	2006	L	2020
7	2007	M	2021
8	2008	N	2022
9	2009	P	2023
A	2010	R	2024
B	2011	S	2025
C	2012	T	2026
D	2013	V	2027
E	2014		

(1) Engine Label
(2) Emission Label
(3) Engine Model
(4) Serial Number

W1010477

- **Month of manufacture**

Month	Engine Lot Number	
January	A0001 ~ A9999	B0001 ~ BZ999
February	C0001 ~ C9999	D0001 ~ DZ999
March	E0001 ~ E9999	F0001 ~ FZ999
April	G0001 ~ G9999	H0001 ~ HZ999
May	J0001 ~ J9999	K0001 ~ KZ999
June	L0001 ~ L9999	M0001 ~ MZ999
July	N0001 ~ N9999	P0001 ~ PZ999
August	Q0001 ~ Q9999	R0001 ~ RZ999
September	S0001 ~ S9999	T0001 ~ TZ999
October	U0001 ~ U9999	V0001 ~ VZ999
November	W0001 ~ W9999	X0001 ~ XZ999
December	Y0001 ~ Y9999	Z0001 ~ ZZ999

* Alphabetical letters "**I**" and "**O**" are not used.

e.g. D1105 - 7 B A001
(a) (b)(c) (d)

(a) Engine Model Name : **D1105**
(b) Year : **7** indicates **2007**
(c) Month : **A** or **B** indicates **January**
(d) Lot number : (**0001 ~ 9999** or **A001 ~ Z999**)

W1011076

[2] E3B ENGINE

[Example : Engine Model Name D1105-**E3B**-XXXX]

The emission controls previously implemented in various countries to prevent air pollution will be stepped up as Non-Road Emission Standards continue to change. The timing or applicable date of the specific Non-Road Emission regulations depends on the engine output classification.

Over the past several years, Kubota has been supplying diesel engines that comply with regulations in the respective countries affected by Non-Road Emission regulations. For Kubota Engines, E3B will be the designation that identifies engine models affected by the next emission phase (See the table below).

When servicing or repairing ###-E3B series engines, use only replacement parts for that specific E3B engine, designated by the appropriate E3B Kubota Parts List and perform all maintenance services listed in the appropriate Kubota Operator's Manual or in the appropriate E3B Kubota Workshop Manual. Use of incorrect replacement parts or replacement parts from other emission level engines (for example: E2B engines), may result in emission levels out of compliance with the original E3B design and EPA or other applicable regulations.Please refer to the emission label located on the engine head cover to identify Output classification and Emission Control Information. E3B engines are identified with "ET" at the end of the Model designation, on the US EPA label. Please note : E3B is not marked on the engine.

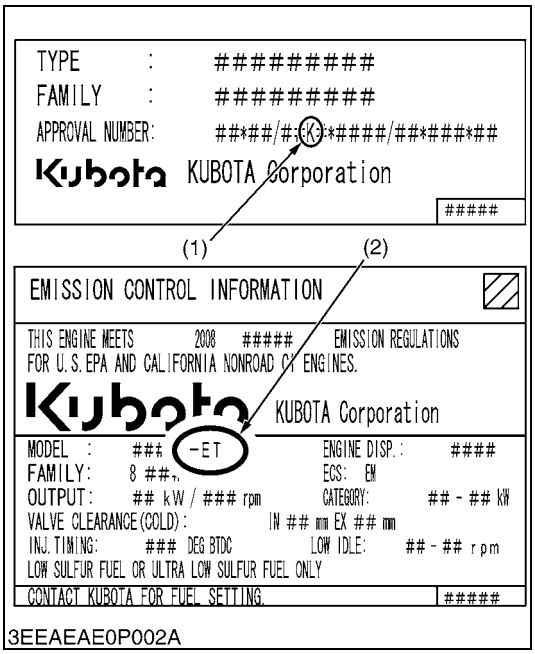

3EEAEAE0P002A

Category (1)	Engine output classification	EU regulation
K	From 19 to less than 37 kW	STAGE IIIA
J	From 37 to less than 75 kW	STAGE IIIA
I	From 75 to less than 130 kW	STAGE IIIA

Category (2)	Engine output classification	EPA regulation
ET	Less than 19kW	Tier 4
	From 19 to less than 56 kW	Interim Tier 4
	From 56 to less than 75 kW	Tier 3
	From 75 to less than 130 kW	Tier 3

(1) EU regulation engine output classification category
(2) “E3B” engines are identified with “ET” at the end of the Model designation, on the US EPA label.
“E3B” designates Tier 3 and some Interim Tier 4 / Tier 4 models, depending on engine output classification.

W1031971

[3] CYLINDER NUMBER

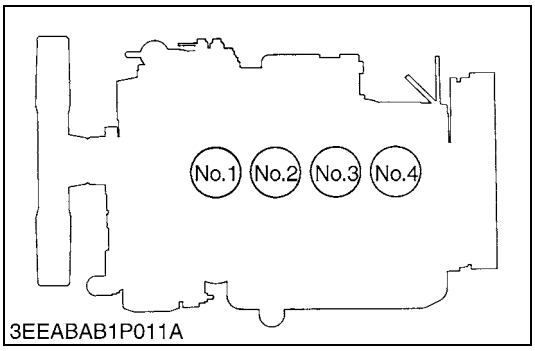

3EEABAB1P011A

The cylinder numbers of KUBOTA diesel engine are designated as shown in the figure.

The sequence of cylinder numbers is given as No.1, No.2, No.3 and No.4 starting from the gear case side.

W1011077

2. GENERAL PRECAUTIONS

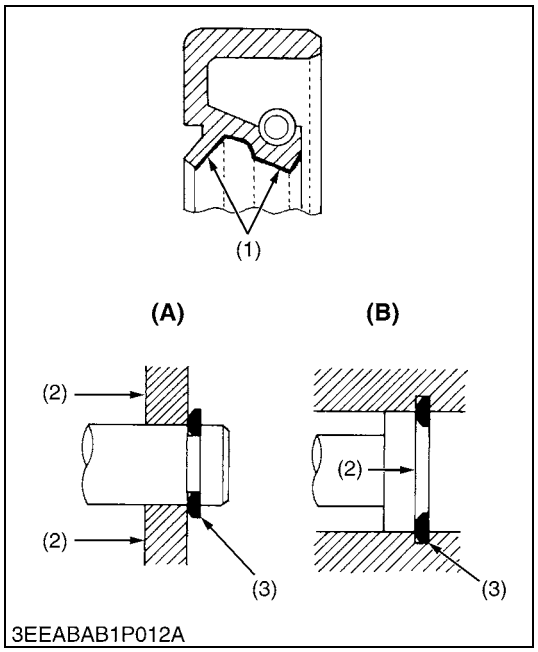

- During disassembly, carefully arrange removed parts in a clean area to prevent confusion later. Screws, bolts and nuts should be replaced in their original position to prevent reassembly errors.
- When special tools are required, use KUBOTA genuine special tools. Special tools which are not frequently used should be made according to the drawings provided.
- Before disassembling or servicing live wires, make sure to always disconnect the grounding cable from the battery first.
- Remove oil and dirt from parts before measuring.
- Use only KUBOTA genuine parts for parts replacement to maintain engine performance and to ensure safety.
- Gaskets and O-rings must be replaced during reassembly. Apply grease to new O-rings or oil seals before assembling.
- When reassembling external or internal snap rings, position them so that the sharp edge faces against the direction from which force is applied.
- Be sure to perform run-in the serviced or reassembled engine. Do not attempt to give heavy load at once, or serious damage may result to the engine.

(1) Grease
(2) Force
(3) Place the Sharp Edge against the Direction of Force

(A) External Snap Ring
(B) Internal Snap Ring

W1011734

3. MAINTENANCE CHECK LIST

To maintain long-lasting and safe engine performance, make it a rule to carry out regular inspections by following the table below.

Item	Service Interval										
	Every										
	50 hrs	100 hrs	200 hrs	400 hrs	500 hrs	1 or 2 months	1 year	800 hrs	1500 hrs	3000 hrs	2 years
* Checking fuel hoses and clamp bands	☆										
* Changing engine oil (Oil pan depth : 110 mm (4.33 in.), 125 mm (4.92 in.), 130 mm (5.12 in.))	★		☆								
* Cleaning air cleaner element (Replace the element after 6 times cleaning)		☆									
Cleaning fuel filter element		☆									
Check fan belt tension and damage		☆									
Checking battery electrolyte level		☆									
* Replacing oil filter cartridge (Oil pan depth : 110 mm (4.33 in.), 125 mm (4.92 in.), 130 mm (5.12 in.))	★		☆								
Checking radiator hoses and clamp bands			☆								
* Checking intake air line			☆								
Replacing fuel filter cartridge				☆							
Cleaning water jacket and radiator interior					☆						
Replacing fan belt					☆						
Recharging battery						☆					
* Replacing air cleaner element							☆				
Checking valve clearance								☆			
* Checking injection nozzle pressure									☆		
* Checking turbocharger										☆	
Checking injection pump										☆	
Checking injection timing										☆	
Changing radiator coolant (L.L.C.)											☆
Replacing radiator hoses and clamp bands											☆
* Replacing fuel hoses and clamps											☆
* Replacing intake air line											☆
Replacing battery											☆

★ Change engine oil and replace oil filter cartridge after the first 50 hours of operation.

* The items listed above (* marked) are registered as emission related critical parts by KUBOTA in the U.S. EPA nonroad emission regulation. As the engine owner, you are responsible for the performance of the required maintenance on the engine according to the above instruction.
Please see the emission Warranty Statement in detail.

W1029462

CAUTION

- **When changing or inspecting, be sure to level and stop the engine.**

■ **NOTE**

Engine Oil :

- **Refer to the following table for the suitable American Petroleum Institute (API) classification of engine oil according to the engine type (with internal EGR, external EGR or non-EGR) and the Fuel Type Used : (Low Sulfur, Ultra Low Sulfur or High Sulfur Fuels).**

Fuel Type	Engine oil classification (API classification)	
	Engines with non-EGR Engines with internal EGR	Engines with external EGR
High Sulfur Fuel [0.05 % (500 ppm) ≤ Sulfur Content < 0.50 % (5000 ppm)]	**CF** (If the "CF-4, CG-4, CH-4, or CI-4" engine oil is used with a high-sulfur fuel, change the engine oil at shorter intervals. (approximately half))	–
Low Sulfur Fuel [Sulfur Content < 0.05 % (500 ppm)] or Ultra Low Sulfur Fuel [Sulfur Content < 0.0015 % (15 ppm)]	**CF, CF-4, CG-4, CH-4** or **CI-4**	**CF** or **CI-4** (Class CF-4, CG-4 and CH-4 engine oils cannot be used on EGR type engines.)

EGR : Exhaust Gas Re-circulation

W1024941

- **CJ-4 classification oil is intended for use in engines equipped with DPF (Diesel Particulate Filter) and is Not Recommended for use in Kubota E3 specification engines.**
- **Oil used in the engine should have API classification and Proper SAE Engine Oil Viscosity according to the ambient temperatures where the engine is operated.**
- **With strict emission control regulations now in effect, the CF-4 and CG-4 engine oils have been developed for use with low sulfur fuels, for On-Highway vehicle engines. When a Non-Road engine runs on high sulfur fuel, it is advisable to use a "CF or better" classification engine oil with a high Total Base Number (a minimum TBN of 10 is recommended).**

Fuel :

- **Cetane Rating : The minimum recommended Fuel Cetane Rating is 45. A cetane rating greater than 50 is preferred, especially for ambient temperatures below –20 °C (–4 °F) or elevations above 1500 m (5000 ft).**
- **Diesel Fuel Specification Type and Sulfur Content % (ppm) used, must be compliant with all applicable emission regulations for the area in which the engine is operated.**
- **Use of diesel fuel with sulfur content less than 0.10 % (1000 ppm) is strongly recommended.**
- **If high-sulfur fuel (sulfur content 0.50 % (5000 ppm) to 1.0 % (10000 ppm)) is used as a diesel fuel, change the engine oil and oil filter at shorter intervals. (approximately half)**
- **DO NOT USE Fuels that have sulfur content greater than 1.0 % (10000 ppm).**
- **Diesel fuels specified to EN 590 or ASTM D975 are recommended.**
- **No.2-D is a distillate fuel of lower volatility for engines in industrial and heavy mobile service. (SAE J313 JUN87)**
- **Since KUBOTA diesel engines of less than 56 kW (75 hp) utilize EPA Tier 4 and Interim Tier 4 standards, the use of low sulfur fuel or ultra low sulfur fuel is mandatory for these engines, when operated in US EPA regulated areas. Therefore, please use No.2-D S500 or S15 diesel fuel as an alternative to No.2-D, and use No.1-D S500 or S15 diesel fuel as an alternative to No.1-D for ambient temperatures below –10 °C (14 °F).**

1) SAE : Society of Automotive Engineers
2) EN : European Norm
3) ASTM : American Society of Testing and Materials
4) US EPA : United States Environmental Protection Agency
5) No.1-D or No.2-D, S500 : Low Sulfur Diesel (LSD) less than 500 ppm or 0.05 wt.%
No.1-D or No.2-D, S15 : Ultra Low Sulfur Diesel (ULSD) 15 ppm or 0.0015 wt.%

4. CHECK AND MAINTENANCE

[1] DAILY CHECK POINTS

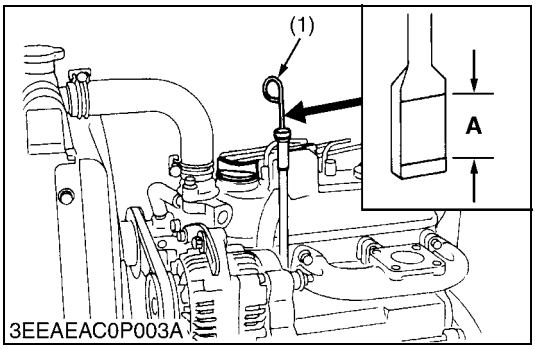

Checking Engine Oil Level

1. Level the engine.
2. To check the oil level, draw out the dipstick (1), wipe it clean, reinsert it, and draw it out again.
   Check to see that the oil level lies (**A**) between the two notches.
3. If the level is too low, add new oil to the specified level.

■ **IMPORTANT**

- **When using an oil of different maker or viscosity from the previous, drain old oil. Never mix two different types of oil.**

■ **NOTE**

- **Be sure to inspect the engine, locating it on a horizontal place. If placed on gradients, accurately, oil quantity may not be measured.**
- **Be sure to keep the oil level between upper and lower limits of the dipstick. Too much oil may cause a drop in output or excessive blow-by gas. On the closed breather type engine in which mist is sucked through port, too much oil may caused oil hammer. While too little oil, may seize the engine's rotating and sliding parts.**

(1) Dipstick **A : Oil Level**

W1016222

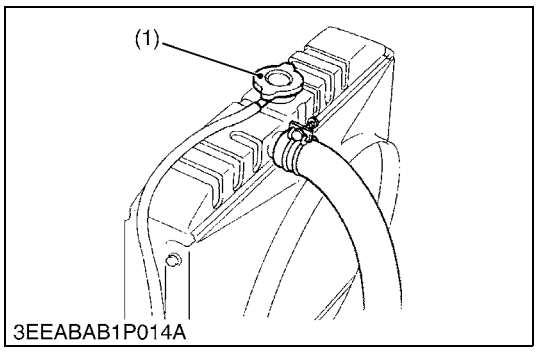

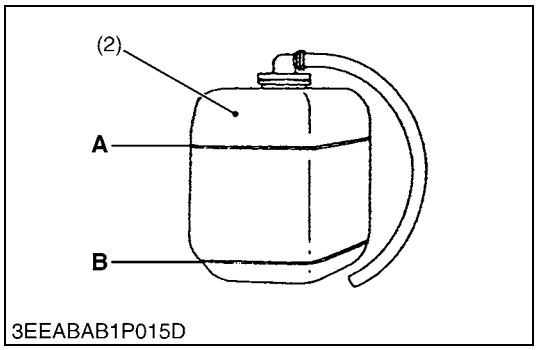

Checking and Replenish Coolant

1. Without recovery tank :
   Remove the radiator cap (1) and check to see that the coolant level is just below the port.
   With recovery tank (2) :
   Check to see that the coolant level lies between **FULL** (**A**) and **LOW** (**B**).
2. If coolant level is too low, check the reason for decreasing coolant.
   (Case 1)
   If coolant is decreasing by evaporation, replenish only fresh, soft water.
   (Case 2)
   If coolant is decreasing by leak, replenish coolant of the same manufacture and type in the specified mixture ratio (fresh, soft water and L.L.C.). If the coolant brand cannot be identified, drain out all of the remaining coolant and refill with a totally new brand of coolant mix.

CAUTION

- **Do not remove the radiator cap until coolant temperature is below its boiling point. Then loosen the cap slightly to relieve any excess pressure before removing the cap completely.**

■ **IMPORTANT**

- **During filling the coolant, air must be vented from the engine coolant passages. The air vents by jiggling the radiator upper and lower hoses.**
- **Be sure to close the radiator cap securely. If the cap is loose or improperly closed, coolant may leak out and the engine could overheat.**
- **Do not use an antifreeze and scale inhibitor at the same time.**
- **Never mix the different type or brand of L.L.C..**

(1) Radiator Cap — **A : FULL**
(2) Recovery Tank — **B : LOW**

W1035779

[2] CHECK POINTS OF INITIAL 50 HOURS

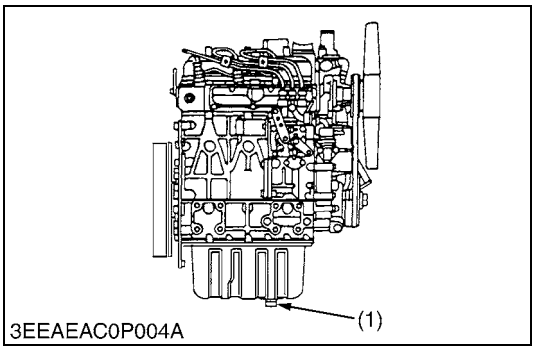

Changing Engine Oil

CAUTION

- **Be sure to stop engine before changing engine oil.**

1. Start and warm up the engine for approx. 5 minutes.
2. Place an oil pan underneath the engine.
3. To drain the used oil, remove the drain plug (1) at the bottom of the engine and drain the oil completely.
4. Screw the drain plug (1).
5. Fill new oil up to upper line on the dipstick.

■ **IMPORTANT**

- **When using an oil of different maker or viscosity from the previous one, remove all of the old oil.**
- **Never mix two different types of oil.**
- **Engine oil should have properties of API classification. (See page G-6.)**
- **Use the proper SAE Engine Oil according to ambient temperature.**
- **Upon an oil change, be sure to replace the gasket with new one.**

Above 25 °C (77 °F)	SAE 30 or SAE 10W-30 SAE 10W-40
0 °C to 25 °C (32 °F to 77 °F)	SAE 20 or SAE 10W-30 SAE 10W-40
Below 0 °C (32 °F)	SAE 10W or SAE 10W-30 SAE 10W-40

Oil pan depth / Models	Capacity		
	Extended Type	Standard Type	
	110 mm (4.33 in.)	125 mm (4.92 in.)	130 mm (5.12 in.)
D1005-E3B / E3BG D1105-E3B / E3BG D1105-T-E3B	–	5.1 L 1.3 U.S.gals	–
D1305-E3B / E3BG	5.7 L 1.5 U.S.gals	–	–
V1505-E3B / E3BG V1505-T-E3B	–	–	6.7 L 1.8 U.S.gals

Tightening torque	Drain plug with copper gasket	M12 × 1.25	33 to 37 N·m 3.3 to 3.8 kgf·m 24 to 27 lbf·ft
	Drain plug with rubber coated gasket	M22 × 1.5	45 to 53 N·m 4.5 to 5.5 kgf·m 33 to 39 lbf·ft

(1) Drain Plug

W1016604

Replacing Oil Filter Cartridge

CAUTION

- **Be sure to stop the engine before changing filter cartridge.**

1. Remove the oil filter cartridge with the filter wrench.
2. Apply a slight coat of oil onto the new cartridge gasket.
3. To install the new cartridge, screw it in by hand. Over tightening may cause deformation of rubber gasket.
4. After the new cartridge has been replaced, the engine oil normally decrease a little. Thus see that the engine oil does not leak through the seal and be sure to read the oil level on the dipstick. Then, replenish the engine oil up to the specified level.

■ **IMPORTANT**

- **To prevent serious damage to the engine, replacement element must be highly efficient. Use only a KUBOTA genuine filter or its equivalent.**

W1017137

[3] CHECK POINTS OF EVERY 50 HOURS

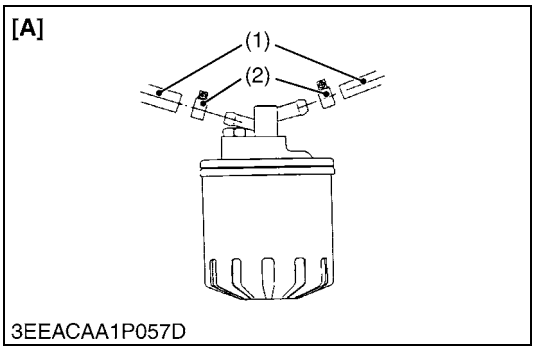

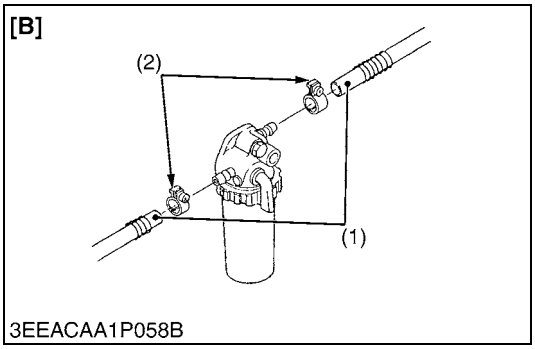

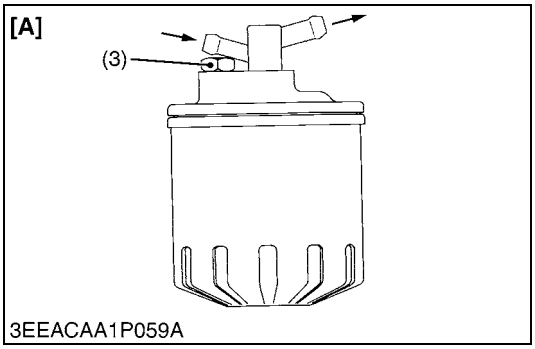

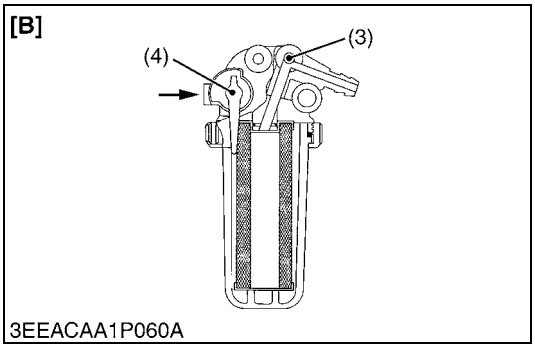

Checking Fuel Hose

1. If the clamp (2) is loose, apply oil to the threads and securely retighten it.
2. The fuel hose (1) is made of rubber and ages regardless of the period service.
   Change the fuel hose together with the clamp every two years.
3. However, if the fuel hose and clamp are found to be damaged or deteriorate earlier than two years, then change or remedy.
4. After the fuel hose and the clamp have been changed, bleed the fuel system.

CAUTION

- **Stop the engine when attempting the check and change prescribed above.**

(When bleeding fuel system)

1. Fill the tank with fuel and open the cock (4).
2. Loosen the air vent plug (3) of the fuel filter a few turns.
3. Screw back the plug when bubbles do not come up any more.
4. Open the air vent cock on top of the fuel injection pump.
5. If equipped electrical fuel feed pump, turn the key to **AC** position and pump the fuel up for 10 to 15 seconds.
   If equipped mechanical fuel feed pump, set the stop lever on stop position and crank the engine for 10 to 15 seconds.
6. Close securely the air vent cock after air bleeding.

■ **NOTE**

- **Always keep the air vent cock on the fuel injection pump closed except when air is vented, or it may cause the engine to stop.**

(1) Fuel Hose
(2) Clamp
(3) Air Vent Plug
(4) Fuel Cock

[A] Cartridge Type
[B] Element Type

W1035921

[4] CHECK POINTS OF EVERY 100 HOURS

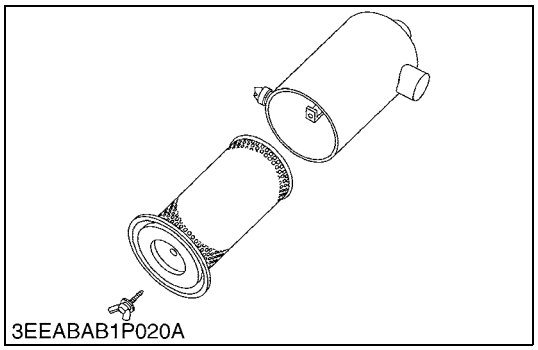
3EEABAB1P020A

Cleaning Air Cleaner Element

1. Remove the air cleaner element.
2. Use clean dry compressed air on the inside of the element. Pressure of compressed air must be under 205 kPa (2.1 kgf/cm^2, 30 psi).
   Maintain reasonable distance between the nozzle and the filter.

■ **NOTE**
- **The air cleaner uses a dry element. Never apply oil to it.**
- **Do not run the engine with filter element removed.**
- **Change the element once a year or every 6th cleaning.**

W1045746

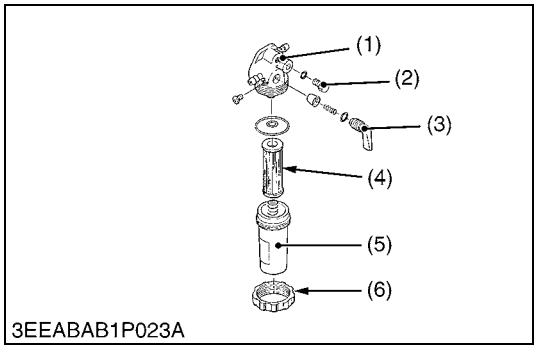

3EEABAB1P023A

Cleaning Fuel Filter (Element Type only)

1. Close the fuel cock (3).
2. Unscrew the retaining ring (6) and remove the filter cup (5), and rinse the inside with kerosene.
3. Take out the element (4) and dip it in the kerosene to rinse.
4. After cleaning, reassemble the fuel filter, keeping out dust and dirt.
5. Bleed the fuel system.

■ **IMPORTANT**
- **If dust and dirt enter the fuel, the fuel injection pump and injection nozzle will wear quickly. To prevent this, be sure to clean the fuel filter cup (5) periodically.**

(1) Cock Body
(2) Air Vent Plug
(3) Fuel Cock
(4) Filter Element
(5) Filter Cup
(6) Retaining Ring

W1046058

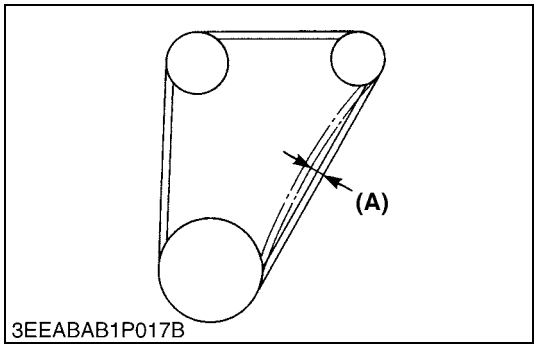

3EEABAB1P017B

Fan Belt Tension

1. Measure the deflection **(A)**, depressing the belt halfway between the fan drive pulley and alternator pulley at specified force 98 N (10 kgf, 22 lbf).
2. If the measurement is not within the factory specifications, loosen the alternator mounting screws and relocate the alternator to adjust.

Deflection **(A)**	Factory spec.	7.0 to 9.0 mm 0.28 to 0.35 in.

(A) Deflection

W1208957

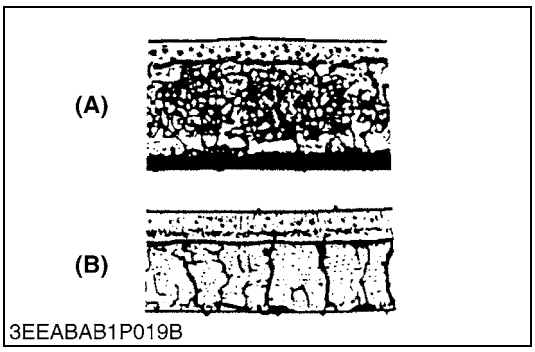

Fan Belt Damage and Wear

1. Check the fan belt for damage.
2. If the fan belt is damaged, replace it.
3. Check if the fan belt is worn and sunk in the pulley groove.
4. If the fan belt is nearly worn out and deeply sunk in the pulley groove, replace it.

(A) Good **(B) Bad**

W1209480

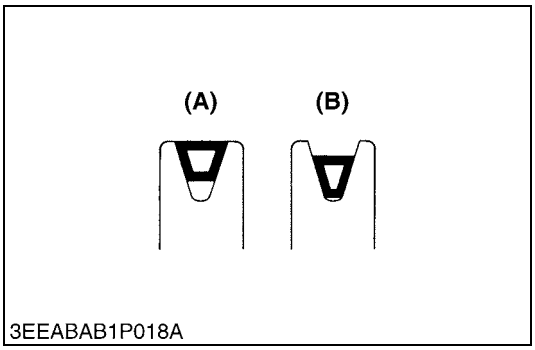

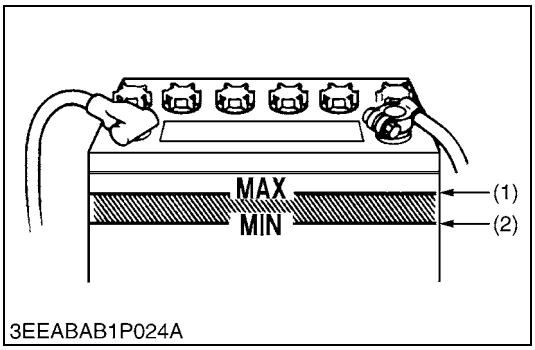

Checking Battery Electrolyte Level

1. Check the battery electrolyte level.
2. If the level is below than lower level line (2), and the distilled water to pour level of each cell.

(1) Upper Level Line (2) Lower Level Line

W1047154

[5] CHECK POINTS OF EVERY 200 HOURS

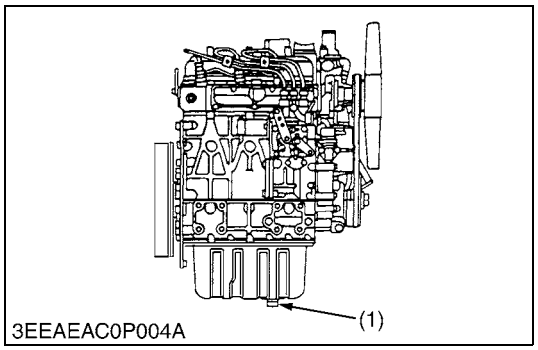

Changing Engine Oil

CAUTION

- **Be sure to stop engine before changing engine oil.**

1. Start and warm up the engine for approx. 5 minutes.
2. Place an oil pan underneath the engine.
3. To drain the used oil, remove the drain plug (1) at the bottom of the engine and drain the oil completely.
4. Screw the drain plug (1).
5. Fill new oil up to upper line on the dipstick.

■ **IMPORTANT**

- **When using an oil of different maker or viscosity from the previous one, remove all of the old oil.**
- **Never mix two different types of oil.**
- **Engine oil should have properties of API classification. (See page G-6)**
- **Use the proper SAE Engine Oil according to ambient temperature.**
- **Upon an oil change, be sure to replace the gasket with new one.**

Above 25 °C (77 °F)	SAE 30 or SAE 10W-30 SAE 10W-40
0 °C to 25 °C (32 °F to 77 °F)	SAE 20 or SAE 10W-30 SAE 10W-40
Below 0 °C (32 °F)	SAE 10W or SAE 10W-30 SAE 10W-40

Oil pan depth / Models	Capacity		
	Extended Type	Standard Type	
	110 mm (4.33 in.)	125 mm (4.92 in.)	130 mm (5.12 in.)
D1005-E3B / E3BG D1105-E3B / E3BG D1105-T-E3B	–	5.1 L 1.3 U.S.gals	–
D1305-E3B / E3BG	5.7 L 1.5 U.S.gals	–	–
V1505-E3B / E3BG V1505-T-E3B	–	–	6.7 L 1.8 U.S.gal

Tightening torque	Drain plug with copper gasket	M12 × 1.25	33 to 37 N·m 3.3 to 3.8 kgf·m 24 to 27 lbf·ft
	Drain plug with rubber coated gasket	M22 × 1.5	45 to 53 N·m 4.5 to 5.5 kgf·m 33 to 39 lbf·ft

(1) Drain Plug

W1018298

Replacing Oil Filter Cartridge

CAUTION

- **Be sure to stop the engine before changing filter cartridge.**

1. Remove the oil filter cartridge with the filter wrench.
2. Apply a slight coat of oil onto the new cartridge gasket.
3. To install the new cartridge, screw it in by hand. Over tightening may cause deformation of rubber gasket.
4. After the new cartridge has been replaced, the engine oil normally decrease a little. Thus see that the engine oil does not leak through the seal and be sure to read the oil level on the dipstick. Then, replenish the engine oil up to the specified level.

■ **IMPORTANT**

- **To prevent serious damage to the engine, replacement element must be highly efficient. Use only a KUBOTA genuine filter or its equivalent.**

W1018617

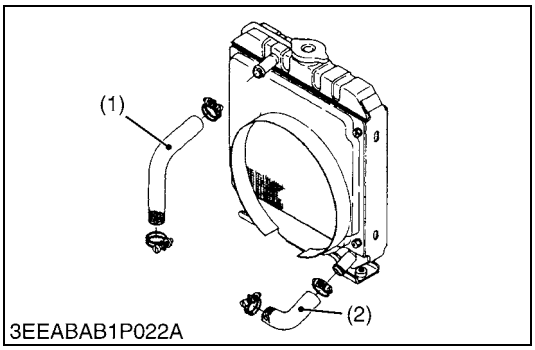

Checking Radiator Hoses and Clamp Bands

1. Check to see if the radiator hoses are properly fixed every 200 hours of operation or every six months, whichever comes first.
2. If the clamp is loose, apply oil to the threads and retighten it securely.
3. The water hose is made of rubber and tens to age. It must be replaced every two years. Also replace the clamp and tighten it securely.

(1) Upper Hose (2) Lower Hose

W1029518

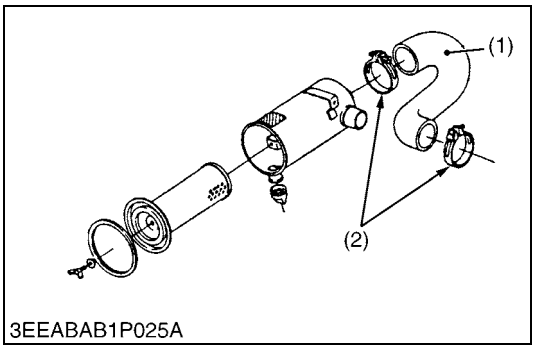

Checking Intake Air Line

1. Check to see if the intake air hose(s) are properly fixed every 200 hours of operation.
2. If the clamp is loose, apply oil to the threads and retighten it securely.
3. The intake air hose(s) is made of rubber and tends to age. It must be changed every two years. Also change the clamp and tighten it securely.

■ **IMPORTANT**

- **To prevent serious damage to the engine, keep out any dust inside the intake air line.**

(1) Intake Air Hose (2) Clamp

W1029631

[6] CHECK POINTS OF EVERY 400 HOURS

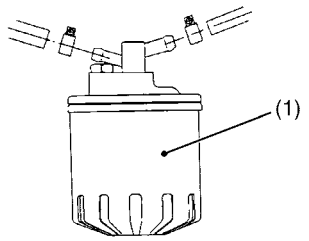

3EEACAA1P057B

Replacing Fuel Filter Cartridge (Cartridge Type)

Water and dust in fuel are collected in the filter cartridge. So, change the filter cartridge every 400 hours service.

1. Remove the used filter cartridge with filter wrench.
2. Apply a thin film of fuel to the surface of new filter cartridge gasket before screwing on.
3. Then tighten enough by hand.
4. Loosen the air vent plug to let the air out.
5. Start engine and check for fuel leakage.

(1) Fuel Filter Cartridge

W1050548

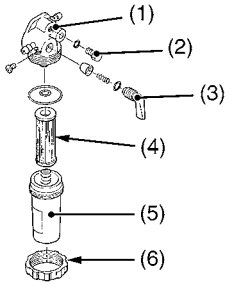

3EEABAB1P023A

Replacing Fuel Filter Element (Element Type)

1. Close the fuel cock (3).
2. Unscrew the retaining ring (6) and remove the filter cup (5), and rinse the inside with kerosene.
3. Replace the filter element (4).
4. Reassemble the fuel filter, keeping out dust and dirt.
5. Bleed the fuel system.

(1) Cock Body
(2) Air Vent Plug
(3) Fuel Cock
(4) Filter Element
(5) Filter Cup
(6) Retaining Ring

W1050583

[7] CHECK POINTS OF EVERY 500 HOURS

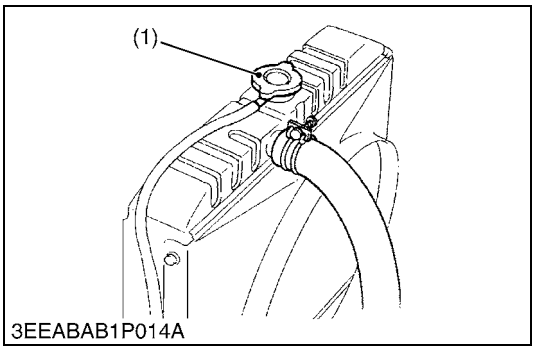

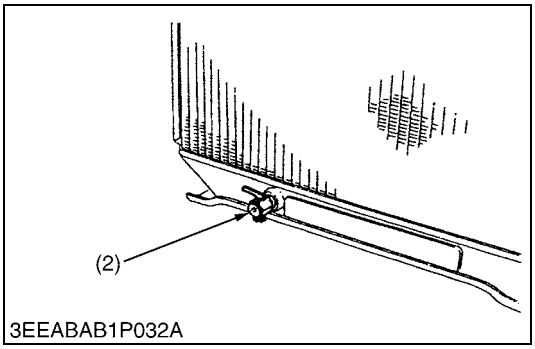

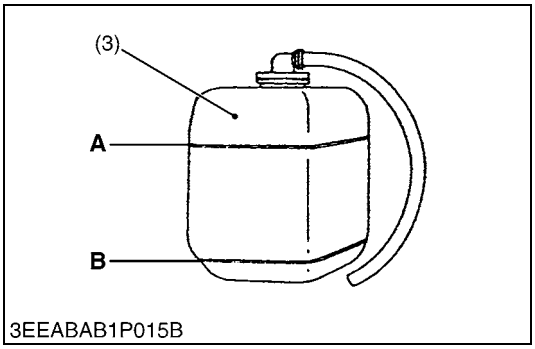

Cleaning Water Jacket and Radiator Interior

CAUTION

- **Do not remove the radiator cap when the engine is hot. Then loosen cap slightly to the stop to relieve any excess pressure before removing cap completely.**

1. Stop the engine and let cool down.
2. To drain the coolant, open the radiator drain plug (2) and remove the radiator cap (1). Then radiator cap (1) must be removed to completely drain the coolant. And open the drain cock of engine body.
3. After all coolant is drained, close the drain plug.
4. Fill with clean water and cooling system cleaner.
5. Follow directions of the cleaner instruction.
6. After flushing, fill with clean water and anti-freeze until the coolant level is just below the port. Install the radiator cap (1) securely.
7. Fill with coolant up to “FULL” (**A**) mark on the recovery tank (3).
8. Start and operate the engine for few minutes.
9. Stop the engine and let cool. Check coolant level of radiator and recovery tank (3) and add coolant if necessary.

■ **IMPORTANT**

- **Do not start engine without coolant.**
- **Use clean, fresh, soft water and anti-freeze to fill the radiator and recovery tank.**
- **When the anti-freeze is mixed with fresh, soft water, the anti-freeze mixing ratio must be less than 50 %.**
- **Securely tighten radiator cap. If the cap is loose or improperly fitted, water may leak out and the engine could overheat.**

(1) Radiator Cap
(2) Drain Plug
(3) Recovery Tank

A : Full
B : Low

W1038102

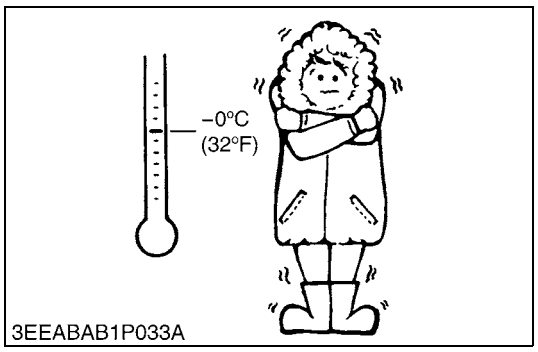

Anti-Freeze

- There are two types of anti-freeze available: use the permanent type (PT) for this engine.
- Before adding anti-freeze for the first time, clean the radiator interior by pouring fresh, soft water and draining it a few times.
- The procedure for mixing water and anti-freeze differs according to the make of the anti-freeze and the ambient temperature. Basically, it should be referred to SAE J1034 standard, more specifically also to SAE J814c.
- Mix the anti-freeze with fresh, soft water, and then fill into the radiator.

■ **IMPORTANT**

- **When the anti-freeze is mixed with fresh, soft water, the anti-freeze mixing ratio must be less than 50 %.**

Vol % anti-freeze	Freezing point		Boiling point*	
	°C	°F	°C	°F
40	–24	–11	106	223
50	–37	–35	108	226

* At 1.013 × 100000 Pa (760 mmHg) pressure (atmospheric). A higher boiling point is obtained by using a radiator pressure cap which permits the development of pressure within the cooling system.

■ **NOTE**

- **The above data represents industrial standards that necessitate a minimum glycol content in the concentrated anti-freeze.**
- **When the coolant level drops due to evaporation, add fresh, soft water only to keep the anti-freeze mixing ratio less than 50 %. In case of leakage, add anti-freeze and fresh, soft water in the specified mixing ratio.**
- **Anti-freeze absorbs moisture. Keep unused anti-freeze in a tightly sealed container.**
- **Do not use radiator cleaning agents when anti-freeze has been added to the coolant.**
  (Anti-freeze contains an anti-corrosive agent, which will react with the radiator cleaning agent forming sludge which will affect the engine parts.)

W1039218

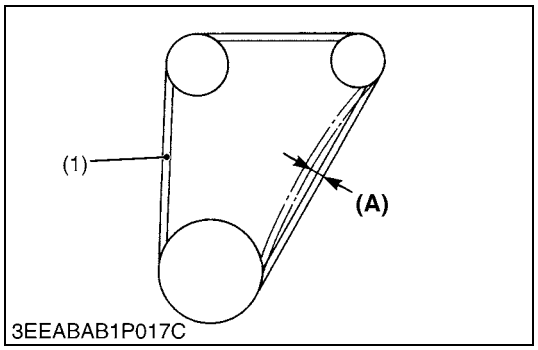

Replacing Fan Belt

1. Remove the alternator.
2. Remove the fan belt (1).
3. Replace new fan belt.
4. Install the alternator.
5. Check the fan belt tension.

Deflection **(A)**	Factory spec.	7.0 to 9.0 mm / 98 N 0.28 to 0.35 in. / 98 N (10 kgf, 22 lbf)

(1) Fan Belt **(A) Deflection**

W1052220

[8] CHECK POINTS OF EVERY 1 OR 2 MONTHS

Recharging

CAUTION

- **When the battery is being activated, hydrogen and oxygen gases in the battery are extremely explosive. Keep open sparks and flames away from the battery at all times, especially when charging the battery.**
- **When charging battery, remove battery vent plugs.**
- **When disconnecting the cable from the battery, start with the negative terminal first. When connecting the cable to the battery, start with the positive terminal first.**
- **Never check battery charge by placing a metal object across the posts.**
  Use a voltmeter or hydrometer.

1) Slow Charging

1. Add distilled water if the electrolyte level is low. When charging, the amount of electrolyte should be slightly lower than the specified level to prevent overflow.
2. Connect the battery to the charging unit, following the manufacture's instructions.
3. As the electrolyte generates gas while charging, remove all port caps.
4. The electrolyte temperature must not exceed 40 °C (104 °F) during charging.
   If it exceed 40 °C (104 °F), decrease the charging amperage or stop charging for a while.
5. When charging several batteries in series, charge at the rate of the smallest battery in the line.

2) Quick Charging

1. Determine the proper charging current and charging time with the tester attached to the quick charger.
2. Determine the proper charging current as 1/1 of the battery capacity. If the battery capacity exceeds 50 Ah, consider 50 A as the maximum.

■ Precaution for Operating a Quick Charger

- Operate with a quick charger differs according to the type.
  Consult the instruction manual and use accordingly.

W1052658

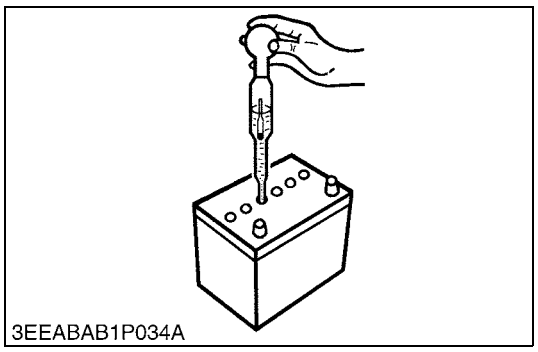
3EEABAB1P034A

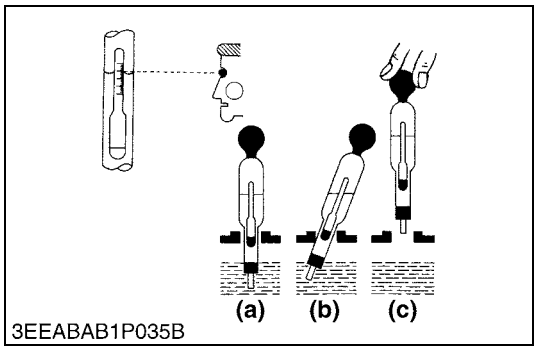

3EEABAB1P035B

Battery Specific Gravity

1. Check the specific gravity of the electrolyte in each cell with a hydrometer.
2. When the electrolyte temperature differs from that at which the hydrometer was calibrated, correct the specific gravity reading following the formula mentioned in **(Reference)**.
3. If the specific gravity is less than 1.215 (after it is corrected for temperature), charge or replace the battery.
4. If the specific gravity differs between any two cells by more than 0.05, replace the battery.

■ **NOTE**

- **Hold the hydrometer tube vertical without removing it from the electrolyte.**
- **Do not suck too much electrolyte into the tube.**
- **Allow the float to move freely and hold the hydrometer at eye level.**
- **The hydrometer reading must be taken at the highest electrolyte level.**

(Reference)

- Specific gravity slightly varies with temperature. To be exact, the specific gravity decreases by 0.0007 with an increase of 1 °C (0.0004 with an increase of 1 °F) in temperature, and increases by 0.0007 with a decreases of 1 °C (0.0004 with a decrease of 1 °F).
  Therefore, using 20 °C (68 °F) as a reference, the specific gravity reading must be corrected by the following formula :
  - Specific gravity at 20 °C = Measured value + 0.0007 × (electrolyte temperature : 20 °C)
  - Specific gravity at 68 °F = Measured value + 0.0004 × (electrolyte temperature : 68 °F)

Specific Gravity	State of Charge
1.260 Sp. Gr.	100 % Charged
1.230 Sp. Gr.	75 % Charged
1.200 Sp. Gr.	50 % Charged
1.170 Sp. Gr.	25 % Charged
1.140 Sp. Gr.	Very Little Useful Capacity
1.110 Sp. Gr.	Discharged

At an electrolyte temperature of 20 °C (68 °F)

(a) Good
(b) Bad
(c) Bad

W1012763

[9] CHECK POINTS OF EVERY YEAR

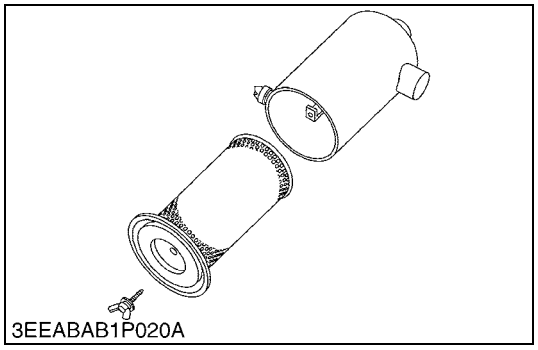
3EEABAB1P020A

Replacing Air Cleaner Element

1. Remove used air cleaner element.
2. Replace new air cleaner element.

■ **NOTE**

- **The air cleaner uses a dry element. Never apply oil to it.**
- **Do not run the engine with filter element removed.**

W1020554

[10] CHECK POINTS OF EVERY 800 HOURS

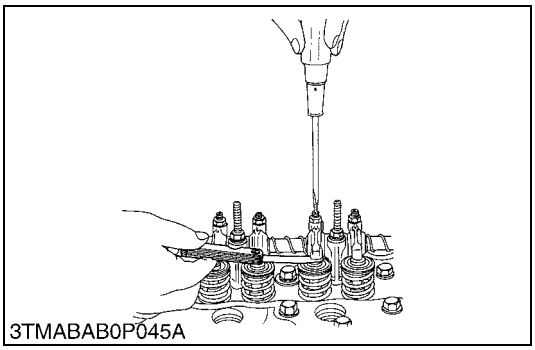
3TMABAB0P045A

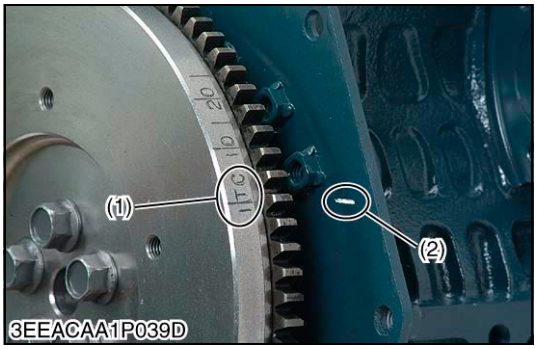

Checking Valve Clearance

■ **IMPORTANT**

- **Valve clearance must be checked and adjusted when engine is cold.**

1. Remove the cylinder head cover and the glow plugs.
2. Align the **"1TC"** mark (1) on the flywheel and alignment mark (2) on the rear end plate so that the No. 1 piston comes to the compression top dead center.
3. Check the following valve clearance marked with "☆" using a feeler gauge.
4. If the clearance is not within the factory specifications, adjust with the adjusting screw.
5. Then turn the flywheel 6.28 rad (360 °), and align the **"1TC"** mark (1) on the flywheel and alignment mark (2) on the rear end plate so that the No. 1 piston comes to the overlap position.
6. Check the following valve clearance marked with "☆" using a feeler gauge.
7. If the clearance is not within the factory specifications, adjust with the adjusting screw.

Number of cylinders / Valve arrangement / Adjustable cylinder location of piston		3 cylinder		4 cylinder	
		IN.	EX.	IN.	EX.
When No. 1 piston is at compression top dead center	1st	☆	☆	☆	☆
	2nd		☆	☆	
	3rd	☆			☆
	4th				
When No. 1 piston is at overlap position	1st				
	2nd	☆			☆
	3rd		☆	☆	
	4th			☆	☆

Valve clearance	Factory spec.	0.145 to 0.185 mm 0.00571 to 0.00728 in.

■ **NOTE**

- **The sequence of cylinder numbers is given as No. 1, No. 2, No. 3 and No. 4 starting from the gear case side.**
- **After adjusting the valve clearance, secure the adjusting screw with the lock nut.**

(1) **"1TC"** Mark (2) Alignment Mark

W10113200